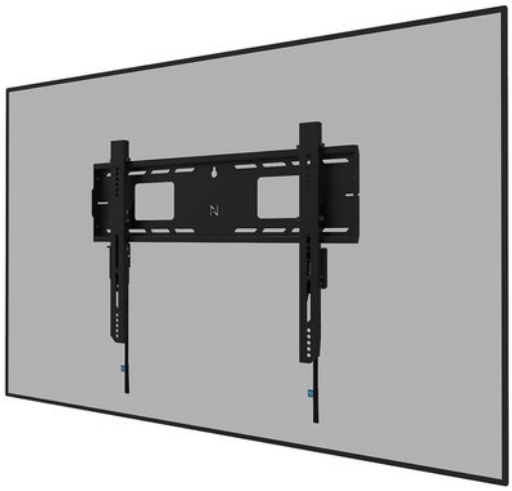

Neomounts

Neomounts WL30-750BL16 Heavy duty wall mount 42-86" - fixed - lockable - fast installation - TÜV

Model: WL30-750BL16

Manufacturer: NEOMOUNTS

EAN: 8717371443269

Product Code: 612122

R2,507

The Neomounts WL30-750BL16 LEVEL is the ultimate solution for securely mounting an interactive or heavy weight display up to 86" with a maximum capacity of 125 kg. This heavy-duty wall mount features a high profile wall plate and is engineered for stability and precision, ensuring your screen is securely mounted even on uneven surfaces. The wall mount is designed to provide the sturdiest and most stable touch screen experience. The brackets of the WL30-750BL16 feature depth adjustable wall supports on the lower brackets for better weight distribution and maximum stability. The mount features individual adjustable brackets (10 mm) for securely adjusting the display height or levelling it.

The product information provided is for reference purposes only. Technical specifications, photos, descriptions and prices may change without prior notice. The manufacturer and seller are not responsible for possible data discrepancies or typographical errors. We recommend checking the current information before purchasing.
shop.cssi.co.za | sales@cssi.co.za | +27 (11)541-9950

The LEVEL-750 wall mount has a profile depth of 4,2 cm and is suitable for screens that meet VESA hole pattern 100x100 to 600x400 mm. Its quickly connectable wall plate allows for multiple screen mounting, while a clever kickstand service position provides easy access to cables and connectors. Additionally, the wall plate is designed with specific cut-outs for wall sockets and securing devices and cables. It features various perforated holes for easy tie-wrap cable fixing and provides space for cable storage, ensuring a clean and tidy finishing.

The WL30-750BL16 includes an safe and practical pull & release system, allowing you to quickly attach and detach the display in a safe and secure manner. It is possible to lock the brackets using a padlock (not included) for extra screen security.

For simple and effective storage, an optionally available AV-rack can be installed to the left or right side of the mount.

The product information provided is for reference purposes only. Technical specifications, photos, descriptions and prices may change without prior notice. The manufacturer and seller are not responsible for possible data discrepancies or typographical errors. We recommend checking the current information before purchasing.
shop.cssi.co.za | sales@cssi.co.za | +27 (11)541-9950